KNUDSEN ENGINEERING LIMITED

Single Frequency Transducer

KEL28SS 200kHz

D249-03905-Rev1

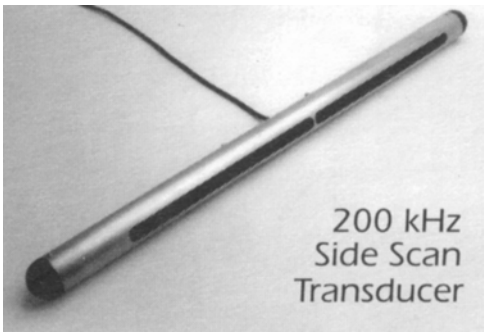

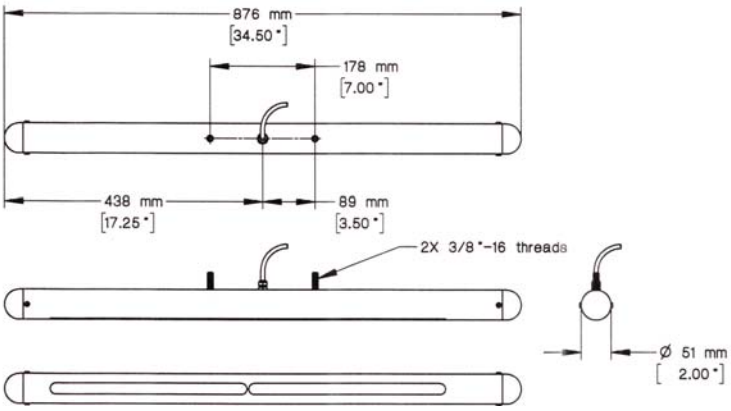

KEL28SS Acoustic Data	
Frequency - Piezoceramic Designator	200 kHz - AA
Element Material/Quantity X Diameter, mm (inches)	PZT 36 X 36 X 3.3 = 650 X 7 (36 X 1.4 X 0.13 = 25.6 X 0.28)
Element Configuration (not to scale)	
Length and Diameter mm (inches)	900 X 50 (36 X 2)
Weight Kg. (Pounds)	6 KG (15 lb.)
Beamwidth at -3dB	0.5° X 49°
Rated RMS Power, W	1,350
Acoustic Window Material	urethane

10 Industrial Road Perth Ontario Canada K7H 3P2 Phone: (613) 267-1165, (315) 393 8861 (US) Fax: (613) 267-7085
http://www.knudsenengineering.com info@knudsenengineering.com